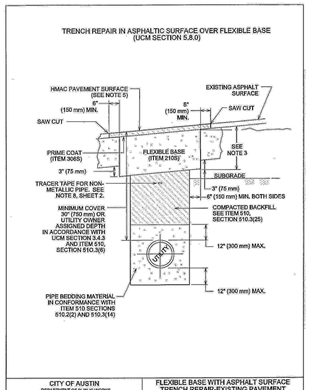

NOTES:

1. THE EXISTING PAVING SURFACE SHALL BE SAW CUT IN A STRAIGHT LINE, A MINIMUM OF 12" (300 mm) WIDER THAN UNDISTURBED SIDES OF THE TRENCH AND SYMMETRICAL ABOUT THE CENTER LINE OF THE EXCAVATION.
2. IF EXCAVATION AREA IS OPEN FOR TEMPORARY PUBLIC USE, THE SURFACE SHALL BE MAINTAINED LEVEL WITH TEMPORARY MATERIAL. USING COLD MIX AC OR TEMPORARY HMAC. TEMPORARY MIX SHALL BE PLACED OVER FLEXIBLE BASE.
3. ROAD BASE SHALL BE REPLACED IN KIND WITH BASE THICKNESS EQUAL TO EXISTING BASE THICKNESS PLUS 3" (75 mm), BUT IN NO CASE LESS THAN 12" (300 mm).
4. DAMAGED PAVEMENT OUTSIDE THE TRENCH CUT SHALL BE REMOVED AND REPLACED WITH A BASE THICKNESS OF 10" (250 mm) OR A THICKNESS MATCHING EXISTING, WHICHEVER IS GREATER.
5. REPLACEMENT AC SURFACE LAYER SHALL BE OF THE TYPE AND THICKNESS BASED ON FUNCTIONAL CLASSIFICATION.
   a) MIN. 2" (50 mm) HMAC TYPE "D" FOR TRENCH REPAIR IN LOCAL/RESIDENTIAL STREETS.
   b) MIN. 3" (75 mm) HMAC TYPE "C" FOR TRENCH REPAIR IN COLLECTOR/ARTERIAL STREETS.
   SEE ITEM 3405, SECTION 3405.4.
6. CLASS "J" PC CONCRETE (ITEM 4035) OR CONTROLLED LOW STRENGTH MATERIAL (CLSM) MAY BE SUBSTITUTED IN THESE REPAIRS FOR THE FLEXIBLE BASE AND COMPACTED BACKFILL. PC CONCRETE GREATER THAN A 2 SACK MIX WILL NOT BE ALLOWED.
7. TACK COAT ALL EXPOSED EDGES AND SURFACES (SPEC ITEM 3078).
8. AS PER CITY OF AUSTIN STANDARD SPECIFICATION 510, SECTION 510.2(8)(K5). FOR ALL NON-METALLIC PIPE, DIRECTLY ABOVE THE CENTERLINE OF THE PIPE AND A MINIMUM OF 12" (300 mm) BELOW THE SUBGRADE, OR A MINIMUM OF 18" (450 mm) BELOW FINISHED GRADE ON AREAS OUTSIDE THE LIMITS OF PAVEMENT, SHALL BE PLACED INDUCTIVE TRACER TAPE IN ACCORDANCE WITH THE MANUFACTURER'S REQUIREMENTS. THE TAPE SHALL BE ENCASED IN A PROTECTIVE, INERT, PLASTIC JACKET AND COLOR CODED IN ACCORDANCE WITH APWA UNIFORM COLOR CODE.

CITY OF AUSTIN
DEPARTMENT OF PUBLIC WORKS
FLEXIBLE BASE WITH ASPHALT SURFACE TRENCH REPAIR-EXISTING PAVEMENT
STANDARD NO. 1100S-2
2 OF 2
THE ARCHITECT/ENGINEER ASSUMES RESPONSIBILITY FOR APPROPRIATE USE OF THIS STANDARD.
ADOPTED

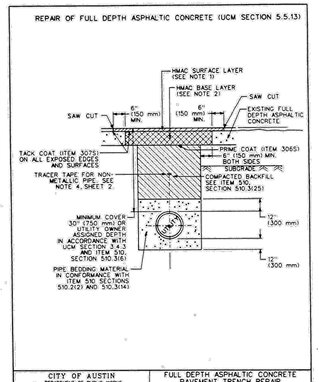

NOTES:

1. REPLACEMENT AC SURFACE LAYER SHALL BE OF THE TYPE AND THICKNESS BASED ON FUNCTIONAL CLASSIFICATION.
   a) MIN. 2" (50 mm) HMAC TYPE "D" FOR TRENCH REPAIR IN LOCAL/RESIDENTIAL STREETS.
   b) MIN. 3" (75 mm) HMAC TYPE "C" FOR TRENCH REPAIR IN COLLECTOR/ARTERIAL STREETS.
   SEE ITEM 3405, SECTION 3405.4.
2. PC CONCRETE GREATER THAN A 2 SACK MIX WILL NOT BE ALLOWED.
3. CLASS "J" (2 SACK MIX) MAY BE SUBSTITUTED FOR CONTROLLED LOW STRENGTH MATERIAL, IF APPROVED BY THE ENGINEER OR DESIGNATED REPRESENTATIVE. PC CONCRETE GREATER THAN A 2 SACK MIX WILL NOT BE ALLOWED.
4. FOR TRENCH WIDTHS 8" (150 mm) OR LESS, WIDENING OF THE BASE BEYOND THE TRENCH FACE MAY BE ELIMINATED IF THE EXISTING PAVEMENT STRUCTURE (INCLUDING THE BASE) REMAINS INTACT AND STABLE AFTER COMPLETION OF EXCAVATION.
5. TACK COAT (ITEM 3075) ALL EXPOSED EDGES AND SURFACES.
6. FOR WATER, RECLAIMED AND WASTEWATER LINE TRENCHES REFER TO 510.3(9) W-TRENCH WIDTH.
7. FOR STORM DRAINS, THE PIPE BEDDING ENVELOPE SHALL EXTEND THE FULL TRENCH WIDTH TO A DEPTH OF 6" (150 mm) BELOW THE PIPE, AND SHALL RISE AT LEAST TO THE SPRING LINE OF THE PIPE. THE DESIGN OF STORM DRAIN PIPES SUBJECTED TO VEHICULAR TRAFFIC OR OTHER SURCHARGE LOADS SHALL BE DESIGNED BY A PROFESSIONAL ENGINEER AND SHALL BE REFERENCED TO SINGLE-BEND STANDARDS. IN ADDITION TO THE PIPE SELECTION, THE DESIGN INCLUDES THE PIPE BEDDING ENVELOPE, DEPTH OF COVER AND COMPACTION REQUIREMENTS.

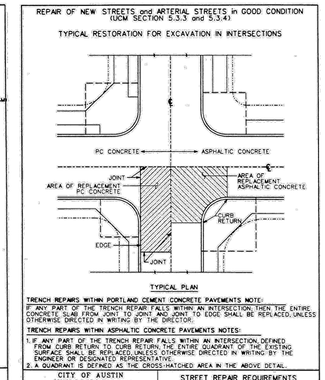

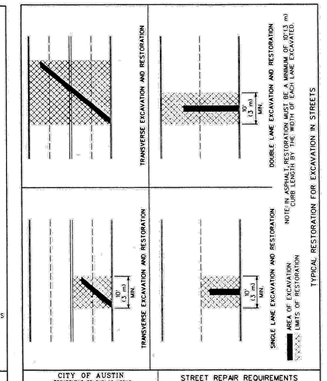

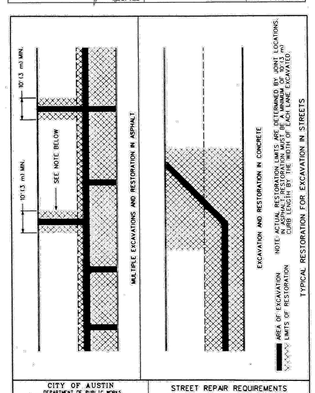

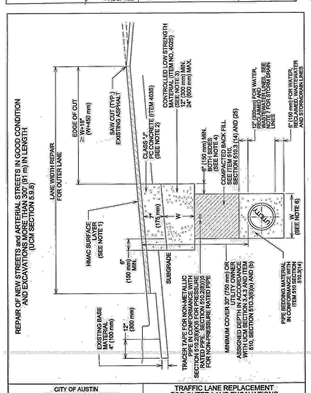

NOTES:

1. REPLACEMENT AC SURFACE LAYER SHALL BE OF THE TYPE AND THICKNESS BASED ON FUNCTIONAL CLASSIFICATION.
   a) MIN. 2" (50 mm) HMAC TYPE "D" FOR TRENCH REPAIR IN LOCAL/RESIDENTIAL STREETS.
   b) MIN. 3" (75 mm) HMAC TYPE "C" FOR TRENCH REPAIR IN COLLECTOR/ARTERIAL STREETS.
   SEE ITEM 3405, SECTION 3405.4.
2. PC CONCRETE GREATER THAN A 2 SACK MIX WILL NOT BE ALLOWED.
3. CLASS "J" (2 SACK MIX) MAY BE SUBSTITUTED FOR CONTROLLED LOW STRENGTH MATERIAL, IF APPROVED BY THE ENGINEER OR DESIGNATED REPRESENTATIVE. PC CONCRETE GREATER THAN A 2 SACK MIX WILL NOT BE ALLOWED.
4. FOR TRENCH WIDTHS 8" (150 mm) OR LESS, WIDENING OF THE BASE BEYOND THE TRENCH FACE MAY BE ELIMINATED IF THE EXISTING PAVEMENT STRUCTURE (INCLUDING THE BASE) REMAINS INTACT AND STABLE AFTER COMPLETION OF EXCAVATION.
5. TACK COAT (ITEM 3075) ALL EXPOSED EDGES AND SURFACES.
6. FOR WATER, RECLAIMED AND WASTEWATER LINE TRENCHES REFER TO 510.3(9) W-TRENCH WIDTH.
7. FOR STORM DRAINS, THE PIPE BEDDING ENVELOPE SHALL EXTEND THE FULL TRENCH WIDTH TO A DEPTH OF 6" (150 mm) BELOW THE PIPE, AND SHALL RISE AT LEAST TO THE SPRING LINE OF THE PIPE. THE DESIGN OF STORM DRAIN PIPES SUBJECTED TO VEHICULAR TRAFFIC OR OTHER SURCHARGE LOADS SHALL BE DESIGNED BY A PROFESSIONAL ENGINEER AND SHALL BE REFERENCED TO SINGLE-BEND STANDARDS. IN ADDITION TO THE PIPE SELECTION, THE DESIGN INCLUDES THE PIPE BEDDING ENVELOPE, DEPTH OF COVER AND COMPACTION REQUIREMENTS.

CITY OF AUSTIN
DEPARTMENT OF PUBLIC WORKS
TRAFFIC LANE REPLACEMENT FOR OUTER LANE EXCAVATIONS
STANDARD NO. 1100S-8A
2 OF 2
THE ARCHITECT/ENGINEER ASSUMES RESPONSIBILITY FOR APPROPRIATE USE OF THIS STANDARD.
ADOPTED

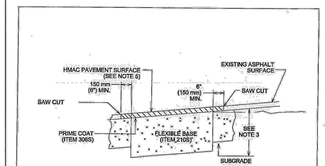

NOTES:

1. PAVEMENT REPAIRS FOR DESIGNATED 'NEW STREETS' (UTILITY CRITERIA MANUAL SECTION 8.1.1) SHALL BE COMPLETED IN CONFORMANCE WITH STANDARDS 1100S-7, 1100S-8A AND 1100S-8B.
2. ALL REPAIRS FOR OTHER STREET DESIGNATIONS SHALL BE MADE USING THIS STANDARD.
3. ALL DAMAGE CAUSED DIRECTLY OR INDIRECTLY TO THE STREET SURFACE OR SUBSURFACE OUTSIDE OF THE PAVEMENT CUT AREAS INCLUDING SCRAPES, CUTS, GOUGES, CRACKING, DEPRESSIONS, AND /OR ANY OTHER DAMAGE CAUSED BY THE CONTRACTOR DURING EXECUTION OF THE WORK SHALL BE REGARDED AS PART OF THE STREET REPAIR.
4. THE EXISTING PAVING SURFACE SHALL BE SAW CUT IN A STRAIGHT LINE, A MINIMUM OF 6" (300 mm) ON EITHER SIDE, WIDER THAN UNDISTURBED SIDES OF THE DISTURBANCE AREA.
5. A FLEXIBLE BASE LAYER EQUAL TO EXISTING BASE LAYER THICKNESS OR A MINIMUM OF 8" SHALL BE PLACED AND COMPACTED TO 100% STANDARD PROCTOR IN CONFORMANCE WITH STANDARD SPECIFICATION NO. 2105.
6. THE EXPOSED SUBGRADE WILL BE COMPACTED IN CONFORMANCE WITH STANDARD SPECIFICATION NO. 2105.
7. REPLACEMENT AC SURFACE LAYER SHALL AS FOLLOWS:
   TYPE "A" HMAC SURFACE LAYER PLACED IN CONFORMANCE WITH STANDARD SPECIFICATION ITEM NO. 3405 WITH A THICKNESS THAT IS GREATER VALUE OF 1 1/2" MINIMUM, OR THICKNESS OF EXISTING ASPHALT LAYER.
8. TACK COAT ALL EXPOSED EDGES AND SURFACES (SPEC ITEM 3075).

CITY OF AUSTIN
DEPARTMENT OF PUBLIC WORKS
EXISTING PAVEMENT REPAIR FOR NON TRENCH AREAS PERPENDICULAR TO CURB ALIGNMENT
STANDARD NO. 1100S-10A
THE ARCHITECT/ENGINEER ASSUMES RESPONSIBILITY FOR APPROPRIATE USE OF THIS STANDARD.
10/19/05
ADOPTED

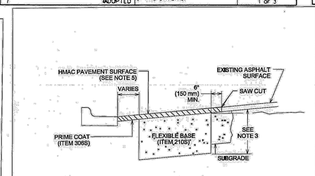

NOTES:

1. PAVEMENT REPAIRS FOR DESIGNATED 'NEW STREETS' (UTILITY CRITERIA MANUAL SECTION 8.1.1) SHALL BE COMPLETED IN CONFORMANCE WITH STANDARDS 1100S-7, 1100S-8A AND 1100S-8B.
2. ALL REPAIRS FOR OTHER STREET DESIGNATIONS SHALL BE MADE USING THIS STANDARD.
3. ALL DAMAGE CAUSED DIRECTLY OR INDIRECTLY TO THE STREET SURFACE OR SUBSURFACE OUTSIDE OF THE PAVEMENT CUT AREAS INCLUDING SCRAPES, CUTS, GOUGES, CRACKING, DEPRESSIONS, AND /OR ANY OTHER DAMAGE CAUSED BY THE CONTRACTOR DURING EXECUTION OF THE WORK SHALL BE REGARDED AS PART OF THE STREET REPAIR.
4. THE EXISTING PAVING SURFACE SHALL BE SAW CUT IN A STRAIGHT LINE, A MINIMUM OF 6" (300 mm) ON EITHER SIDE, WIDER THAN UNDISTURBED SIDES OF THE DISTURBANCE AREA.
5. A FLEXIBLE BASE LAYER EQUAL TO EXISTING BASE LAYER THICKNESS OR A MINIMUM OF 8" SHALL BE PLACED AND COMPACTED TO 100% STANDARD PROCTOR IN CONFORMANCE WITH STANDARD SPECIFICATION NO. 2105.
6. THE EXPOSED SUBGRADE WILL BE COMPACTED IN CONFORMANCE WITH STANDARD SPECIFICATION NO. 2105.
7. REPLACEMENT AC SURFACE LAYER SHALL AS FOLLOWS:
   TYPE "A" HMAC SURFACE LAYER PLACED IN CONFORMANCE WITH STANDARD SPECIFICATION ITEM NO. 3405 WITH A THICKNESS THAT IS GREATER VALUE OF 1 1/2" MINIMUM, OR THICKNESS OF EXISTING ASPHALT LAYER.
8. TACK COAT ALL EXPOSED EDGES AND SURFACES (SPEC ITEM 3075).

CITY OF AUSTIN
DEPARTMENT OF PUBLIC WORKS
EXISTING PAVEMENT REPAIR FOR NON TRENCH AREAS PARALLEL TO CURB ALIGNMENT
STANDARD NO. 1100S-10B
THE ARCHITECT/ENGINEER ASSUMES RESPONSIBILITY FOR APPROPRIATE USE OF THIS STANDARD.
10/19/05
ADOPTED

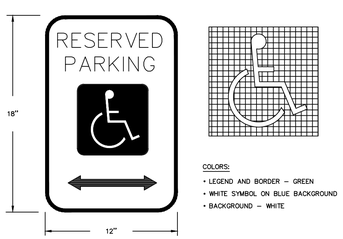

HANDICAP SIGN

N.T.S.

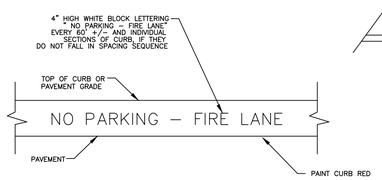

FIRE LANE CURB PAINTING AND MARKING

N.T.S.

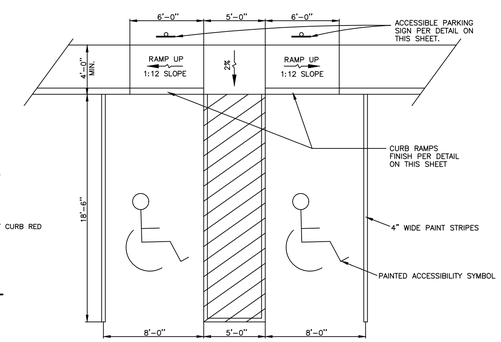

HANDICAP PARKING/RAMP DETAIL

N.T.S.

FOR CITY USE ONLY:

SITE PLAN APPROVAL Sheet 11 of 37
FILE NUMBER: SP-2019-0297C APPLICATION DATE: JULY 15, 2019
APPROVED BY COMMISSION ON: _____ UNDER SECTION 112 OF
CHAPTER 25-5 OF THE CITY OF AUSTIN CODE.
EXPIRATION DATE (25-5-81.LDC)_____ CASE MANAGER J. SILTALA
PROJECT EXPIRATION DATE (ORD.#970905-A)_____DWPZ ____DDZ X

Director, Development Services Department

RELEASED FOR GENERAL COMPLIANCE:_____ ZONING: PUD
Rev. 1_____ Correction 1 _____
Rev. 2_____ Correction 2 _____
Rev. 3_____ Correction 3 _____

FINAL PLAT MUST BE RECORDED BY THE PROJECT EXPIRATION DATE, IF APPLICABLE. SUBSEQUENT SITE PLANS WHICH DO NOT COMPLY WITH THE CODE CURRENT AT THE TIME OF FILING, AND ALL REQUIRED BUILDING PERMITS AND/OR A NOTICE OF CONSTRUCTION (IF A BUILDING PERMIT IS NOT REQUIRED), MUST ALSO BE APPROVED PRIOR TO THE PROJECT EXPIRATION DATE.

DATE	NO.	REVISION	APPROVAL

garza EMC
7708 Rialto Blvd., Suite 125
Austin, Texas 78735
Tel. (512) 298-2264 Fax (512) 298-2592
TBPE Firm # F-8429
Garza EMC, LLC © Copyright 2021

JONAH D. MANKOVSKY 110095 LICENSED 7/2/2021

SITE PLAN DETAILS

218 SOUTH LAMAR
218 SOUTH LAMAR, AUSTIN, TEXAS 78704

PFLUGER WR & MC & PFLUGER SPOUSAL

DRAWN BY: MB/RM
DESIGNED BY: JDM
QA / QC:
PROJECT NO.: 113586-00002

SHEET 11 OF 37

CITY OF AUSTIN APPROVED Date 10/21/2021

\\004-fs-01\teamprojects\113586-00002\Civil\00-CAD\113586-00002-SITE-DTL.dwg modified by jmankovsky on May 10, 21 10:48 AM

SP-2019-0297C